FLAMLINE

Expansion Joints System

SEALTEC
WATERPROOFING SPECIALISTS
TO SEAL & PROTECT

Product Data

October 2009

- Sealtec FlamLINE Flexjoint is a torchable specialist waterproof expansion joint system, that offers a practical solution to expansion joints more commonly found in membrane roof construction, and is used in conjunction with, torch applied roofing and waterproofing membranes.

FlamLINE Solution

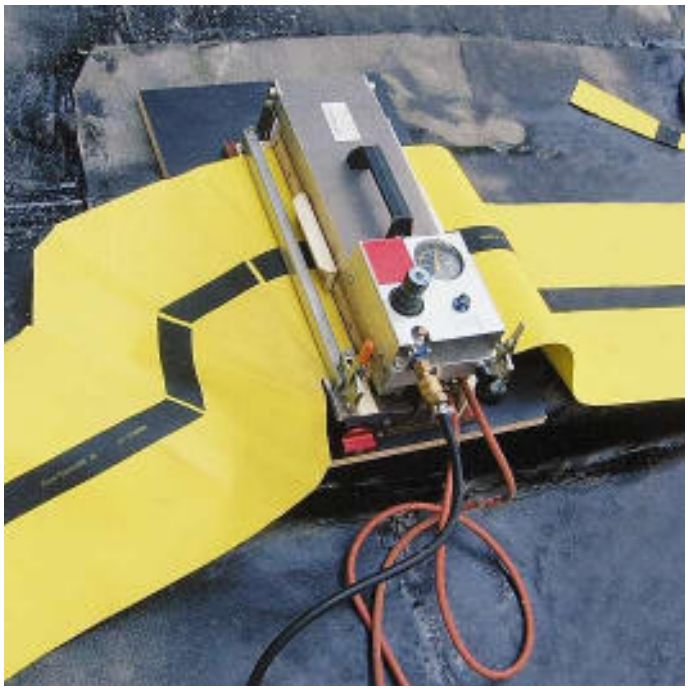

The *FlamLINE* roll is vulcanized on site to produce a seamless monolithic joint.

FlamLINE Expansion Joints System

FlamLINE Installation

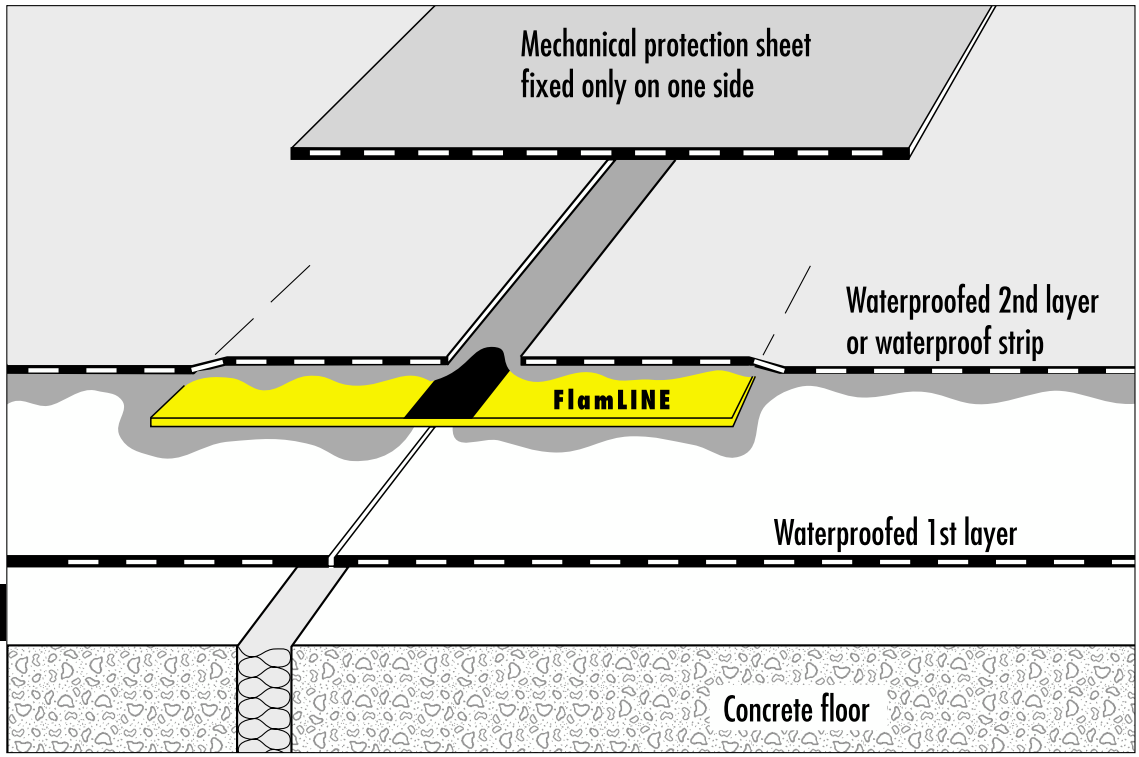

Floor/Floor

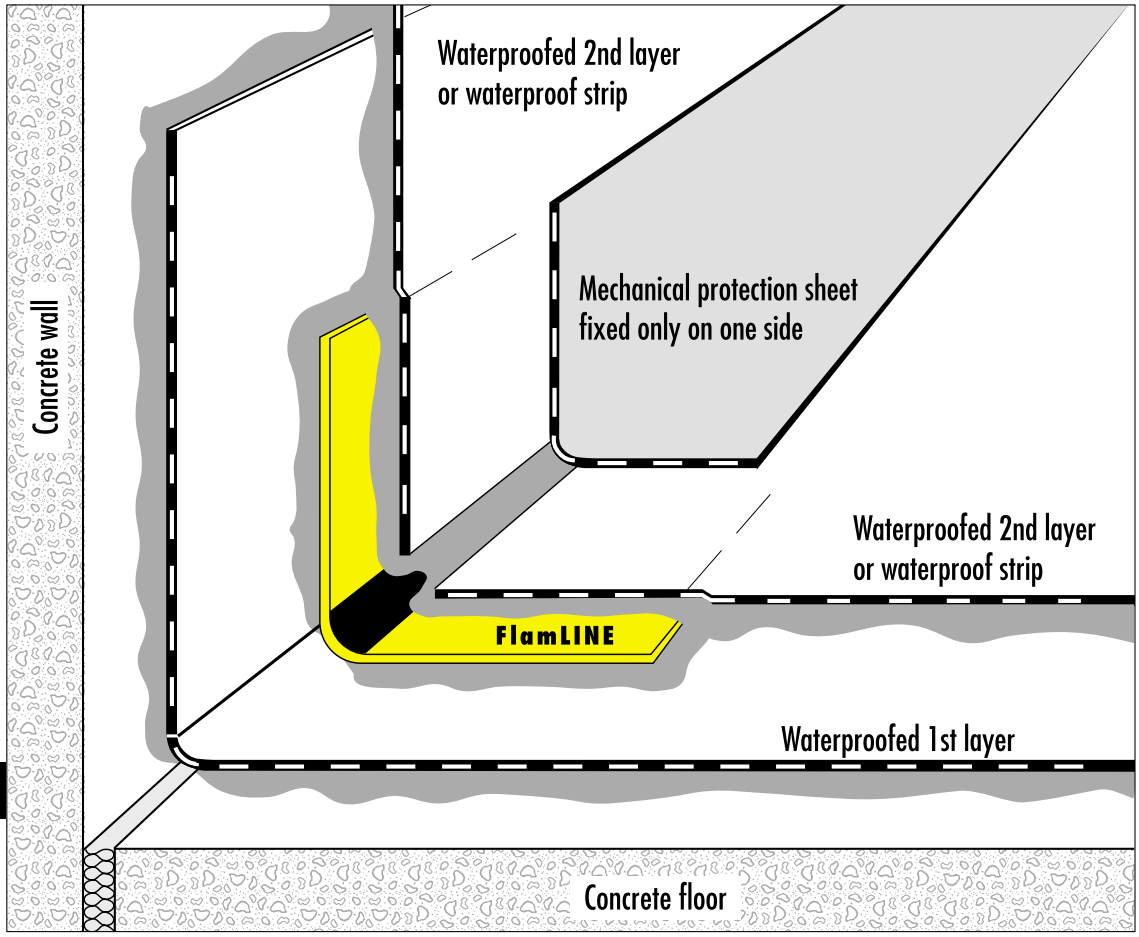

Floor/Wall

FlamLINE Formpieces

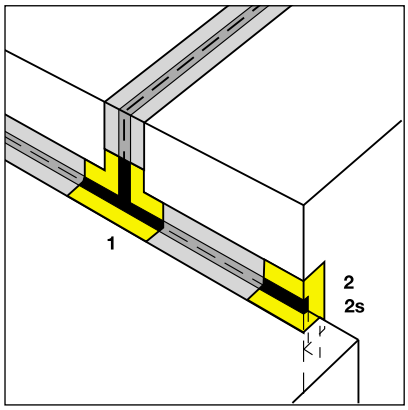

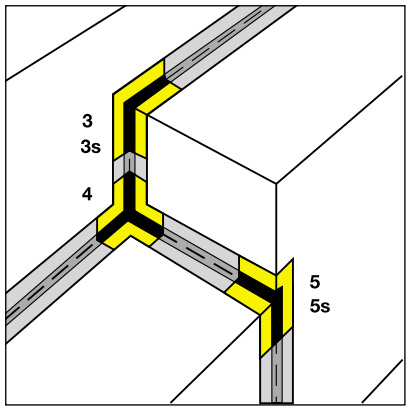

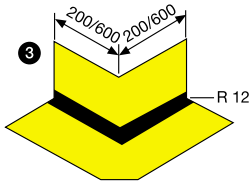

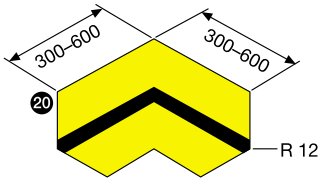

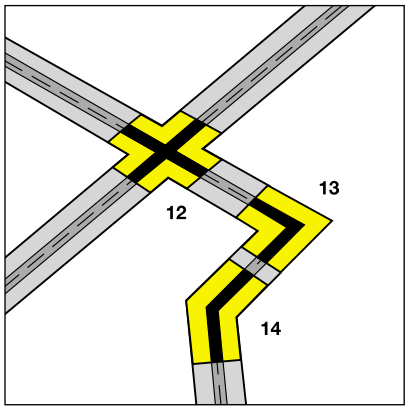

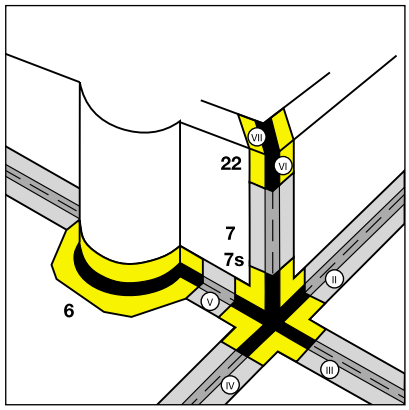

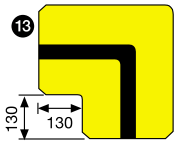

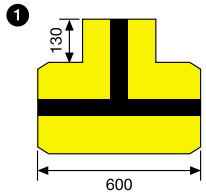

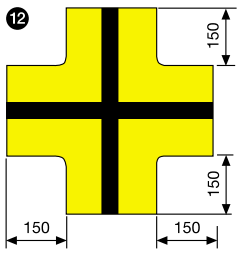

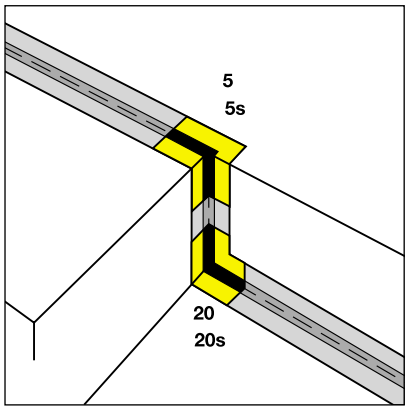

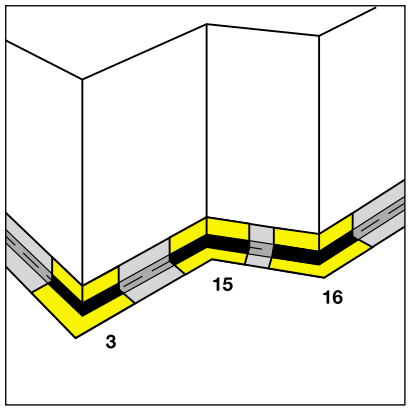

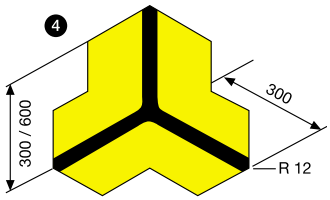

FlamLINE Torching installation

Important

A Preparation

- Lay out the **FlamLINE** waterproof expansion joint and verify its length and all detailing.
- **FlamLINE** can accomodate a pre installation movement of up to **2 mm per meter**.
- **Before installation notify the supplier of any discrepancies in length or detailing.**
- Lay **FlamLINE** with the logo side up.
- Ensure that the **FlamLINE** and the waterproofing substrate is completely dry before beginning installation.
- Cut the waterproofing membrane at the joint location.

B or Variant C Torching

B Apply heat to the waterproofing ply and embed the **FlamLINE** into it, using the "torch and flop" technique. Press the **FlamLINE** into the hot waterproofing with a blunt putty knife.

C Apply heat to the waterproofing ply and unroll the **FlamLINE** into it. Press the **FlamLINE** into the hot waterproofing with a blunt putty knife.

D Flashing in

Flash in the **FlamLINE** with a compatible torch down flashing ply, encapsulating the **FlamLINE**.

- After installation provide mechanical protection for the **FlamLINE** waterproof expansion joint. Protection can be in the form of a protective mat or a polymer bituminous strip fixed at intermitent points.
- **FlamLINE** is always installed by encapsulation between roofing/waterproofing membrane plies.

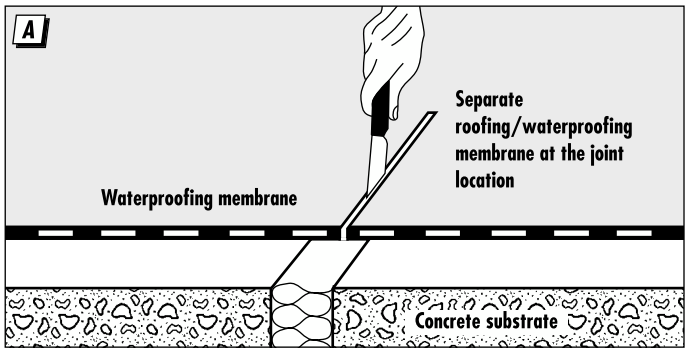

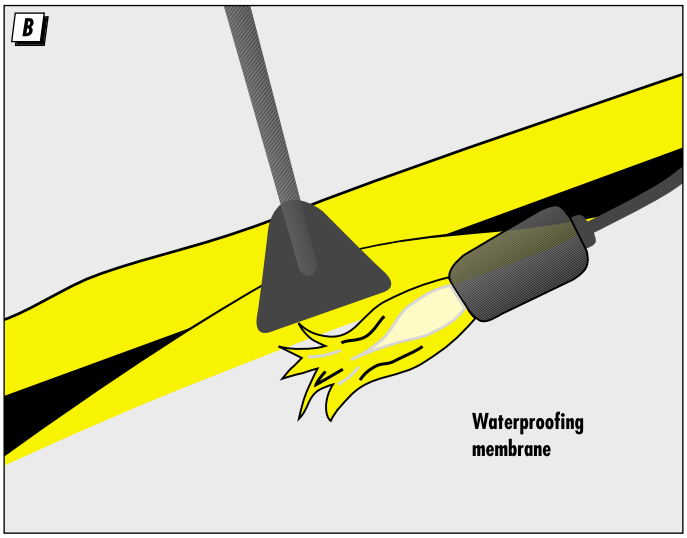

C Variant

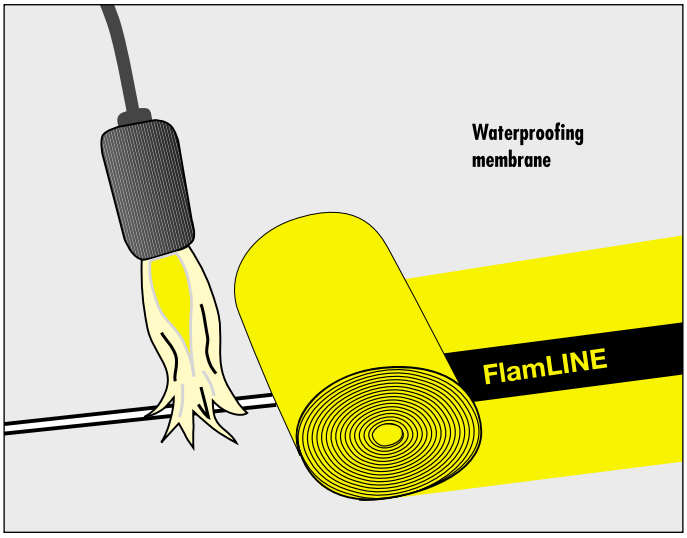

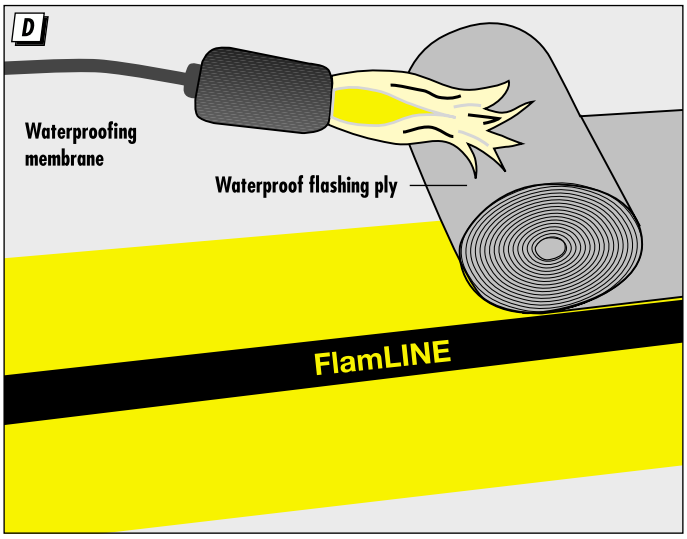

FlamLINE Technical Data

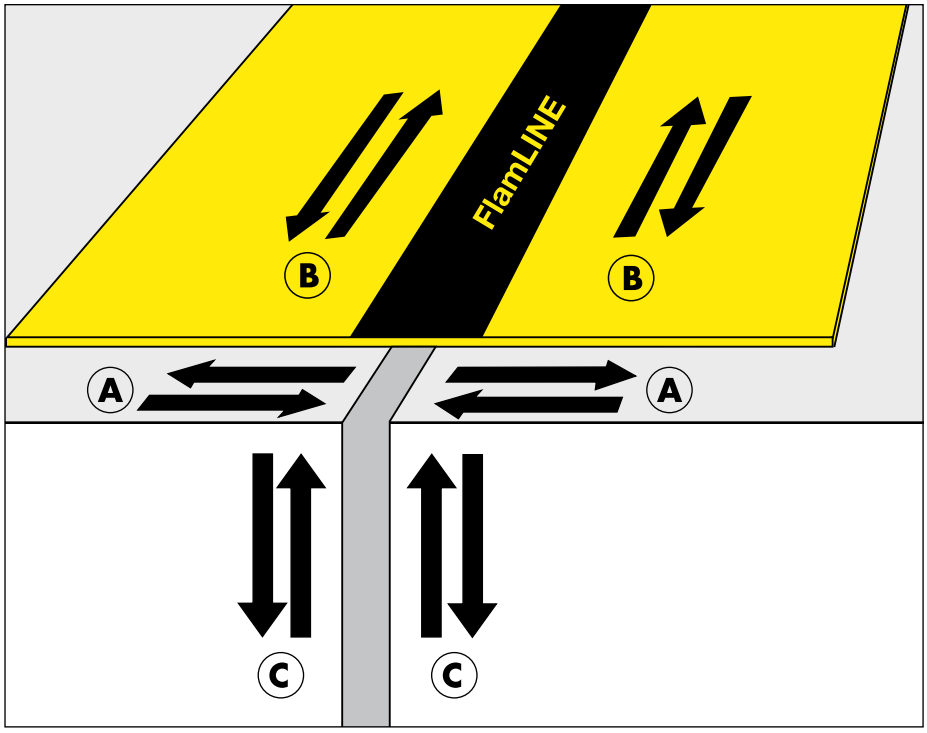

FlamLINE 40

A Horizontal movement (max. **±40 mm**)
B Shear movement (max. **±20 mm**)
C Vertical movement (max. **±30 mm**)

FlamLINE 100

A Horizontal movement (max. **±100 mm**)
B Shear movement (max. **± 50 mm**)
C Vertical movement (max. **± 75 mm**)

FlamLINE 240

A Horizontal movement (max. **±240 mm**)
B Shear movement (max. **±120 mm**)
C Vertical movement (max. **±180 mm**)

Property	Unit	Method	Result
Hardness	Shore A	DIN 53505	55 ±5
Tensile strength	N / mm²	DIN 53504	> 6
Elongation	%	DIN 53504	> 700
Tear strength	N / mm	DIN 53507	> 10
Water vapour permeability* my-factor	g / m² x Tag	DIN 53122	0.817 ca. 240000
Fire rating		DIN 4102	DIN 4102-B2

* hight 0.55 mm

Material Description

The base material for **FlamLINE** waterproof expansion joint is manufactured from a high grade Butyl-Elastomer with the following properties:

- excellent resistance to ozone
- long term high temperature resistance (up to + 90 °C)
- high flexibility at low temperatures (– 40 °C)

FlamLINE is resistant to:

- alkali, acids and saline solutions
- water and steam
- polar solvents, such as alcohol and ketone

Low resistance to homopolar emollients and solvents (e.g. mineral oils, benzene, fuels and aromatic compounds, such as toluene). Prolonged contact with these agents should be avoided.

Contact during the installation phase with the torch will not impair the material properties.

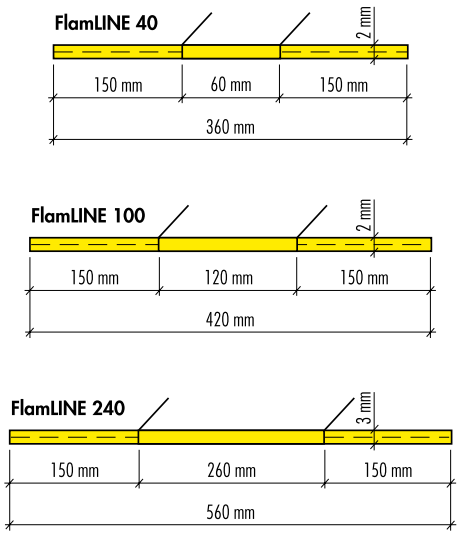

SEALTEC LTD
P.O Box 101431, North Shore City 0745
48 Diana Drive, Glenfield
Freephone: (0800) 179 000
Phone: (09) 444 9047
Fax: (09) 444 9049
Email: sealtec@sealtec.co.nz
Web: www.sealtec.co.nz

SEALTEC
WATERPROOFING SPECIALISTS
TO SEAL & PROTECT